34-ZDUAL-KIT

Antenna

This antenna provides superior pattern coverage for indoor applications operating in 2400-2500 MHz, as well as 4900 to 5825 MHz. This economical model provides industry leading wideband performance and omni-directional gain. It features an attractive, compact package that is ideal for indoor applications where aesthetics are important.

General Specifications:

Dual band Low Profile Antenna

Radome Material:
UL 94-V0 PC/ABS

Polarization:
Vertical, Linear

Nominal Impedance:
50 Ohms

Cable:
16” Plenum rated RG-58/U PL

Connector Options:
Reverse Polarity TNC
Reverse Polarity SMA

Mounting Method:
Through hole 15/16 dia (0.94)
7/8-14 UNF plastic Hex-Nut

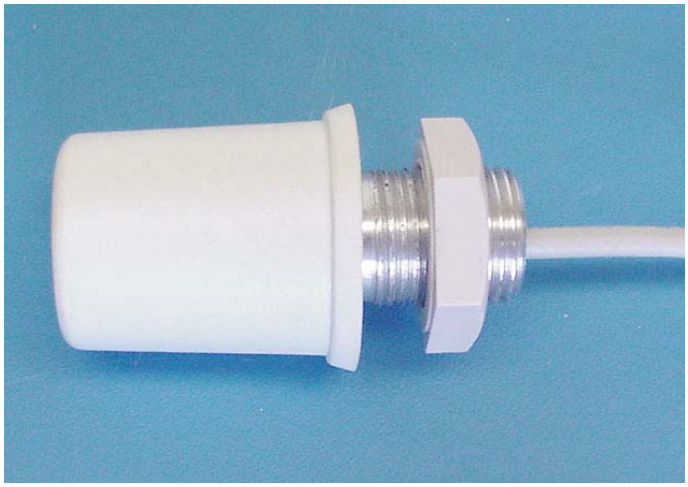

Electrical Specifications

Frequency Range	Nominal Gain	H-Plane Beamwidth	E-Plane Beamwidth	VSWR	Maximum Input Power
2400-2500 MHz	4 dBi	Omni-directional	35° Nominal	< 2.0:1	10 Watts
4900-5825 MHz	4 dBi	Omni-directional	20° Nominal	< 2.0:1	10 Watts

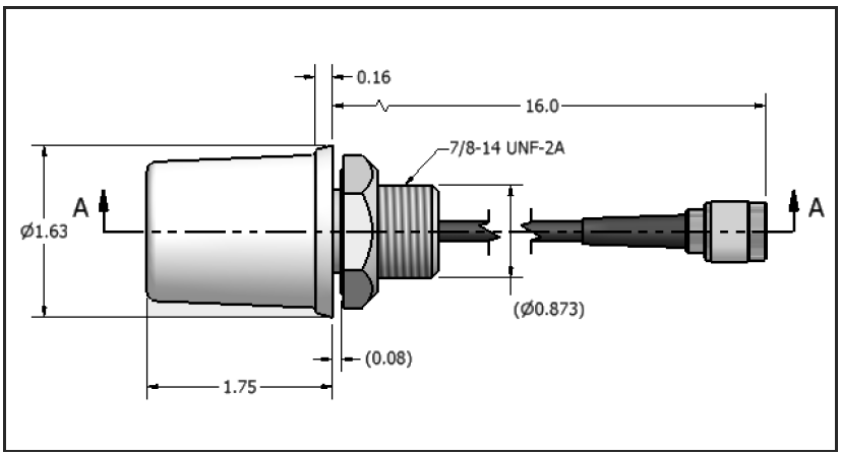

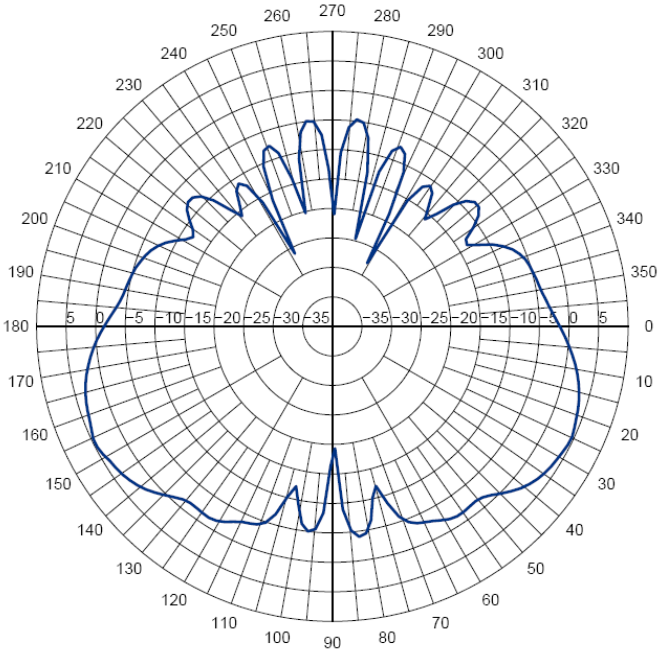

Elevation Cut at 2.4 GHz

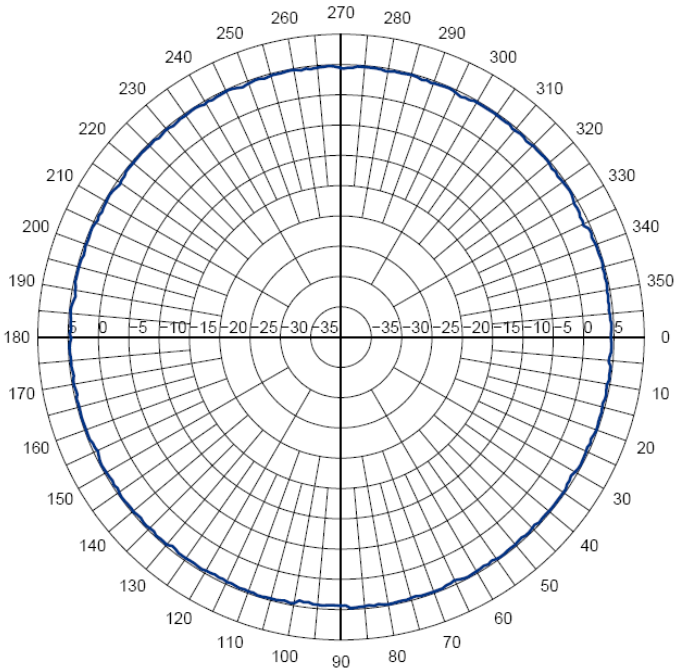

Azimuth Cut at 2.4 GHz

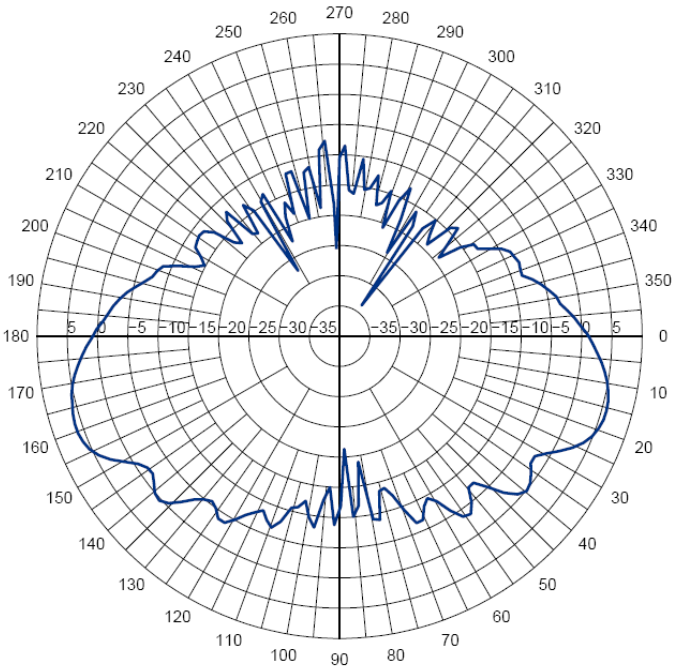

Elevation Cut at 4.9-5.9 GHz

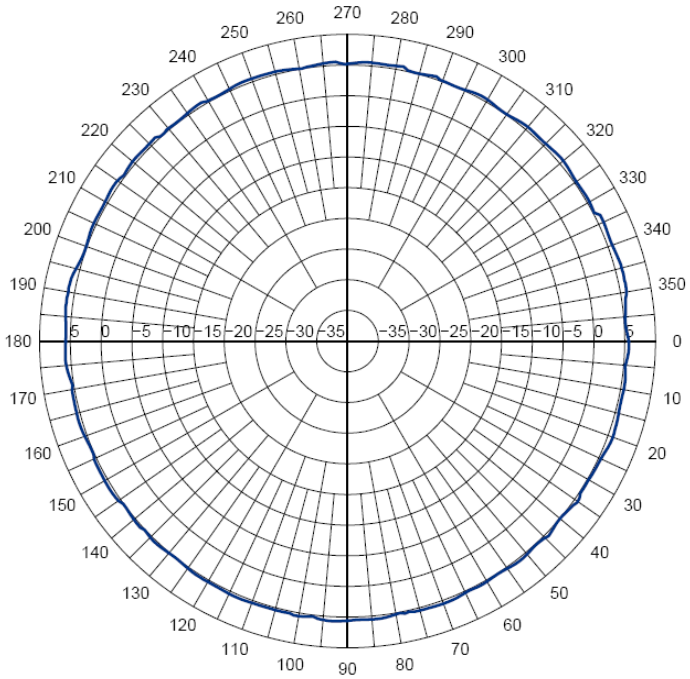

Azimuth Cut at 4.9-5.9 GHz